POST-TENSIONING INSTITUTE
OF AUSTRALIA LIMITED

ENSURING EXCELLENCE AND ACCREDITATION FOR THE POST-TENSIONING INDUSTRY
Post-Tensioning Institute of Australia Limited ABN 86 121 218 228 PO Box 861, Five Dock NSW 2046
T: 02 8767 6292 F: 02 8767 6291 E: info@ptia.org.au W: www.ptia.org.au

Safe Stressing – Multi Strand System

PTIA Guidance Note
GN04/v.1
May 2012

When using a number of strands in a round duct, with each individual strand threaded through a common anchorage and stressing them simultaneously, it is known as a multi strand system.

Multi Strand Anchorage

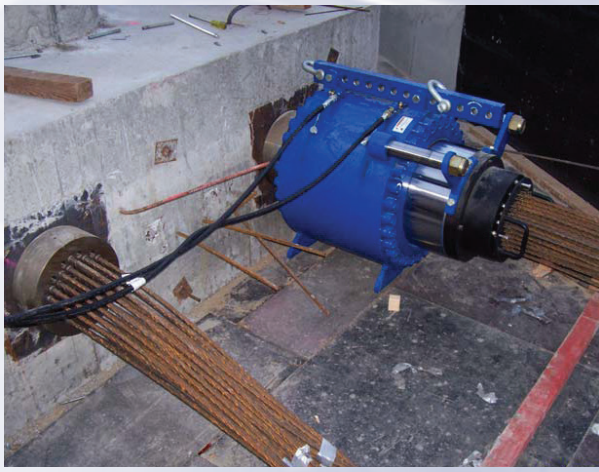

Multi Strand Stressing

Safety (OH&S) Prior to Stressing Multi Strand:

Procedure prior to stressing

- Check that the structural drawings you are using are correct and current for the project.
- Check the stressing notes on the post-tensioning drawing. These notes will detail a stressing sequence if required, stage stressing if required, the transfer strength required before stressing, and the designated loads for which tendons are to be stressed.
- Check that the concrete has attained the specified compressive strength. Never commence stressing if the concrete has not reached the required compressive strength without specific written approval from the design engineer.
- Check to see that the jack and gauge have identification markings and that those markings correspond to the calibration sheet. A copy of the calibration sheet should be kept with the jack and gauge at all times. The calibration sheet should carry the following information;
  - ✓ Final stressing pressure
  - ✓ The diameter and grade of Strand for which the jack is being used.
  - ✓ Jack number
  - ✓ Gauge number
  - ✓ Date calibration expires
- Place caution signs, place barricading around exclusion zones and take safety precautions in accordance with the statuary safety and specification requirements, and as per Safe Work Method Statement.
- Assemble and check the stressing equipment. Attach the stressing gauge. Check the position settings on the hydraulic pump and place it in the neutral position.
- Ensure all Hydraulic connections and hoses are clean before assembly.

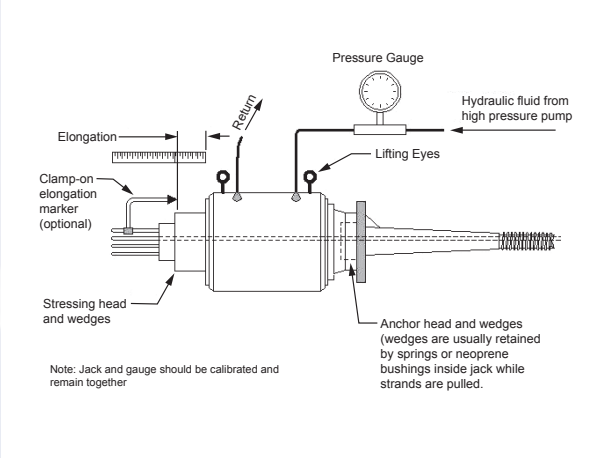

Typical multi-strand, centre hole, stressing jack

Hydraulic Pump and Multi Strand Jack

- Check the hydraulic pump is in the off position.
- Connect the power leads and check power supply.
- When not in use place the control valve on the pump into neutral.

Stressing Procedure

The stressing should only be carried out by experienced personnel who are familiar with the stressing equipment and all safety requirements necessary during the stressing operation.

During the stressing operation always remain vigilant and ensure nobody stands behind the jack or on top of the anchor, and away from the exposed far end of the tendon. Failing to stand in the correct position when a failure occurs can result in a severe injury or death.

- Clean jack jaws before use.
- Mechanical lifting aids, such as a crane, will be necessary to lift and place multi strand jacks into place for stressing. The crane crew should be involved with the coordination and planning for stressing and be familiar with the Safe Work Method Statement for Multi Strand Stressing.
- Slide the stressing jack over the strands, making sure that the strands inserted into the jack match the pattern on the block. Place it firmly against the face of the anchor, and check there are no obstructions that may hinder the jack's movement during the stressing operation.
- It's important to ensure the nose of the jack is firmly against the face of the anchor and that the jack is level and square to the anchor face before stressing commences.
- Connect the two hydraulic hoses from the pump to the jack, making sure that the fittings are secure. Each of the hoses should be connected to the corresponding "pressure" outlets and "return" outlets on the pump and jack.
- Place the 3 way valve/handle into the stressing position and ensure that the inline pressure release tap is tightened clockwise. Once the jack has taken some load and is held firmly in place, release the lifting chains of the crane from the jack.
- On Tendons of 30 metre length or more, or according to Specific Project Specifications, it may be necessary to take the slack out of the tendon. This initial force applied to the tendon must not exceed 5% of the minimum breaking load of the tendon. Once the slack has been taken from the tendon, return the ram on the jack and paint the strands at the face of the block.
- Stress the tendon incrementally to the designated load, recording elongation measurements at each load increment (Check construction drawings to confirm load and then refer to calibration certificate for the jacking pressure).

- Once the load has been reached, reattach the chains of the crane to the jack and then release the load on the jack by turning the inline pressure release tap on the pump, slowly anticlockwise. The load should be released incrementally and release measurements recorded at each release increment. When the gauge reading is zero, place the 3 way valve/handle in the return position, and return the ram on the jack. As soon as the ram has fully retracted, stop the pump immediately as any excessive build up of pressure could damage the jack seals.
- Place the control valve on the hydraulic pump in the neutral position, remove the hydraulic leads from the jack, then remove the stressing jack from the strands.
- Repeat these steps for each tendon in the stressing sequence until all are stressed.
- If required, a measurement can be taken between the face of the wedges and the base mark on strands. This measurement represents the total extension of the tendon. Draw in of the wedges at trailing end of a live/live tendon should be deducted to arrive at the net extension.

General Safety Prior to Stressing Multi Strand:

- OH&S requirements are to be in accordance with legislation/regulations/codes of practice, organisational safety policies and procedures and project safety plan. This may include protective clothing and equipment, use of tools and equipment, workplace environment and safety, handling of materials, use of fire fighting equipment, organisational first aid, hazard control and hazardous materials and substances.
- Personal protective equipment is to include that prescribed under legislation/regulation/codes of practice, workplace policies and practices.
- Safe operating procedures are to include but not be limited to the conduct of operational risk assessment and treatments associated with manual handling, trip hazards, confined work areas, lighting, hazardous materials, cutting and grinding equipment, working with cables under stress, traffic control, working in proximity to others, worksite visitors and the public.
- Emergency procedures are to include, but may not be limited to organisational first aid requirements, evacuation & extinguishing fires.
- Construction sites can be dangerous places and unfortunately account for a large proportion of workplace injuries. It is therefore vital that you are familiar with your work environment and the job you are about to undertake.
- Think about what could go wrong at each stage of what you do and be prepared for an emergency situation. Find out where the nearest first aid station is and who the First Aid Officers are in your area. This information must be made available to you at the Site Induction. Know where first attack fire fighting equipment is located and how to use it.
- There can be many hazards on a construction site, some obvious and others hard to detect. Your ability to identify site hazards and assess the danger is vital to not only your safety but also that of your workmates.
- Remember, being involved in an accident not only affects you, it affects everyone that cares for you.

Know Your Workplace

Construction safety is everyone's responsibility.

Personnel and Safety

Pre-stressing tendons are the backbone of the structure. When properly stressed, they will prevent the structure from cracking and deteriorating. Unfortunately, a badly stressed tendon looks exactly like a properly stressed tendon. Therefore, the only way to ensure proper stressing is to have an experienced, trained crew present during all stressing operations.

People operating the equipment and taking measurements should never stand behind a live jack. This is also true at the dead-end of the strand: never stand behind the anchor of a tendon being stressed. Although it does not happen often, tendons do break, wedges do let go and large forces are released in a split second, making jacks jump and propelling tendons out of an anchorage. In order to make everybody on the project aware of the fact that there is a tendon being stressed, a warning system should be in place such as warning signs, barricading, or red flags.

Stressing Barricade

Stressing barricades are provided to stop or reduce the momentum of a jack or strand which is dislodged or fails during stressing. The location of the stressing operation determines the type of barricade.

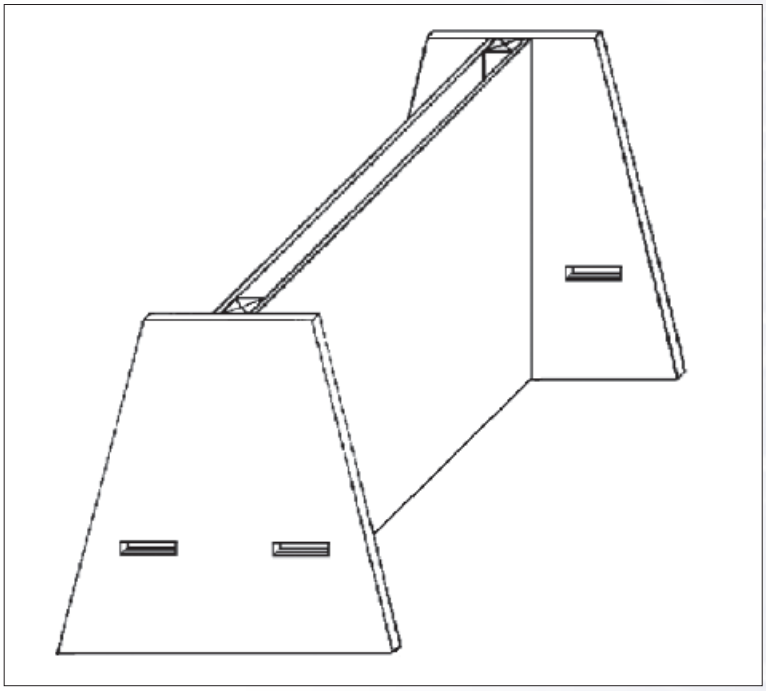

An example of a portable impact absorbing barrier suitable for placing behind stressing jack.

Place caution signs, bunting tape, backing boards and take safety precautions in accordance with the statuary safety and specification requirements, and as per Safe Work Method Statement.

Strand Slip

When stressing the crew should make sure that no strands slip. All strands in the tendon should be marked at both ends so that a slipped strand will show up immediately. One way to do this is to cut the strands off evenly at both ends after the jack has been attached and pressurized. The cut should be made at some distance from a dead end wedge plate and beyond the rear of the stressing jack(s) leaving a sufficient length projecting in case it is necessary to re-grip and re-stress. Another method is to mark all strands with spray paint. A slipped strand will show up promptly by lagging behind the other strands.